OMS in the World

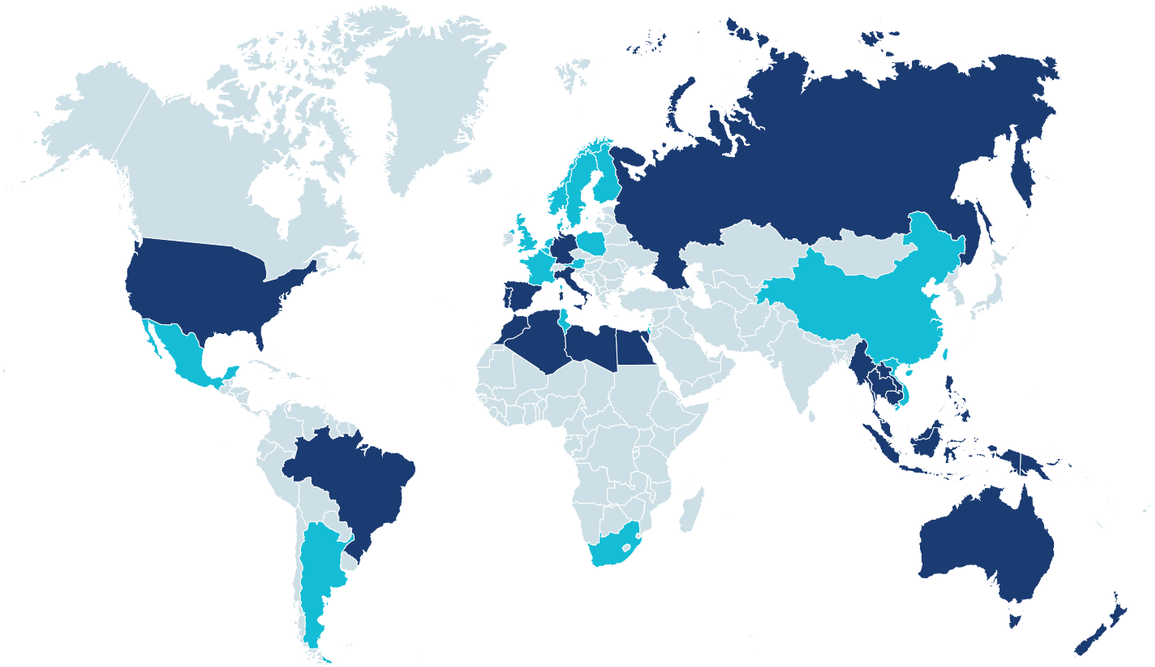

Subsidiaries Distributors

ITALY OMS Spa Omstrap Srl Marpak	**GERMANY** OMS International Packaging Solution Gmbh	**SPAIN** OMS Espana	**PORTUGAL** Embalcer	**RUSSIA** OMS Systems LLC
MAGHREB OMS Maghreb	**SINGAPORE** OMS Singapore	**BRASIL** OMS Brasil	**USA** Polychem OMS Systems LLC	**AUSTRALASIA** OMS Australasia
THAILAND OMS Packaging co. Ltd (Bangkok)	**UK** Gordian Strapping LD	**AUSTRIA** Ing. Josef Riegler Verpackungstechnik	**BENELUX** Certis Packaging Systems	**FRANCE** Getra Sas
POLAND Manuli Ekobal S.p. Z.o.o.	**DENMARK** Walpak	**FINLAND** OY Telpak AB	**MEXICO** Italcer	**ARGENTINA** Eximconsult SA
TUNISIA TouPack Group	**CHINA** Packware International Ltd Nantong. Jiansu Province	**VIETNAM** Advance Technology co. Ltd (Ho Chi Min)	**SOUTH AFRICA** Future Packaging and Machinery Pty	**ISRAEL** M.M.T.S.

Officina Meccanica Sestese S.p.A.
Via Borgomanero, 44 - 28040 Paruzzaro (NO)
Tel.+39 0322 541411 - Fax +39 0322 53157
www.omsspa.com info@omsspa.com

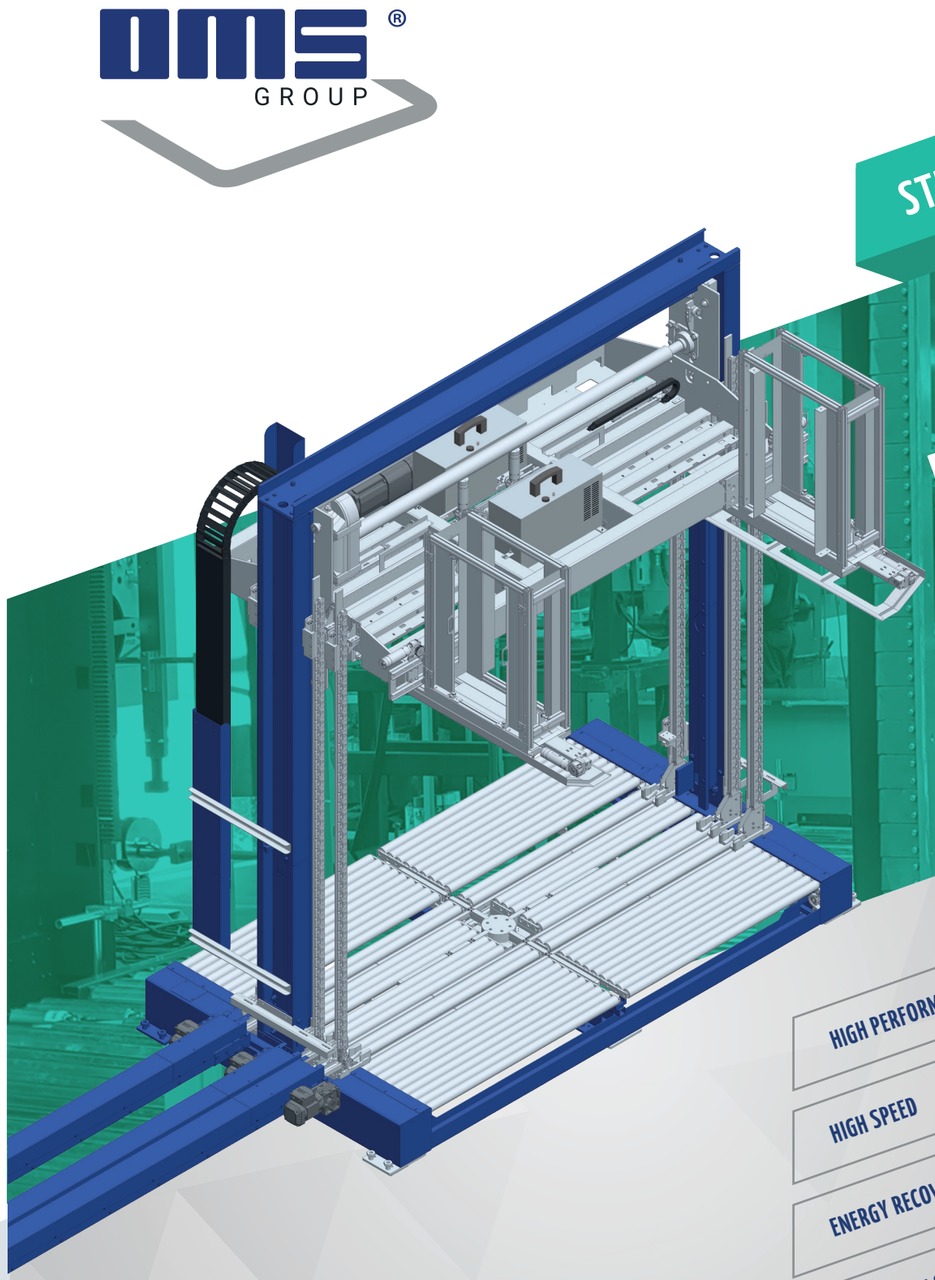

STRAPPING

MOD.
PRESS MASTER PLUS

NEW!
Also available with **SONIC PLUS** sealing

- HIGH PERFORMANCE
- HIGH SPEED
- ENERGY RECOVERING SYSTEM
- SAFETY LOCK SYSTEM
- FULLY AUTOMATIC STRAP LOADING SYSTEM
- FULLY AUTOMATIC STRAP EXCHANGE SYSTEM
- FULLY AUTOMATIC STRAP REFEEDING SYSTEM (HEAD)

Applications

Cardboards **Paper**

PRESS MASTER PLUS

PMP_EN

The fully automatic vertical strapping machine PRESS MASTER PLUS automatically applies vertical straps.
The machine is designed to be installed into a fully automatic production line.

Possible types of strapping

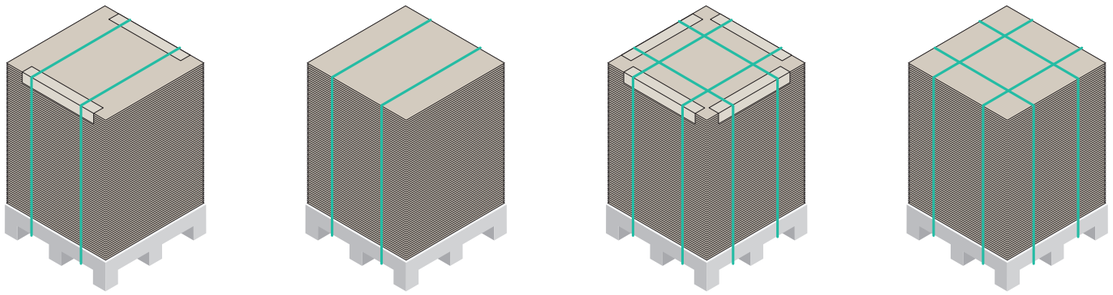

Lift and turn cross

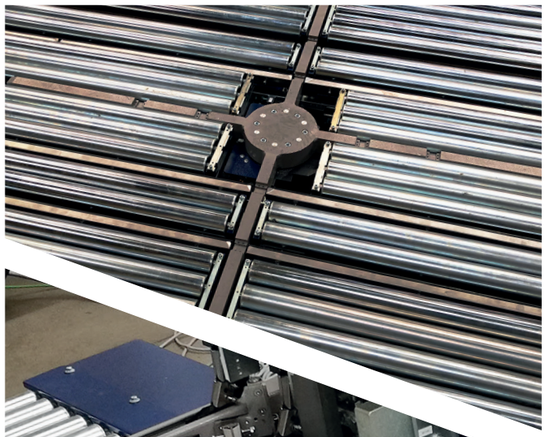

Cardboard dispenser

Technical data

Compression	
Compression force	up to 36.000 N

Power supply	
Working voltage	3/PE, 380 -415 V, AC 50 Hz
Control voltage	24 V, DC
Total connection	~ 6,5 kVA

Standard machine dimensions

Applicable strapping heads
SONIC Plus / TR1400 / TR1400HD

Strap	
Type of strap	Polyester (PET) - Polypropylene (PP)

Capacity of the system	
(2x0) double strapping	up to 200 pallets / hour *

* Depending on pack sizes, conveyor speed and strapping head

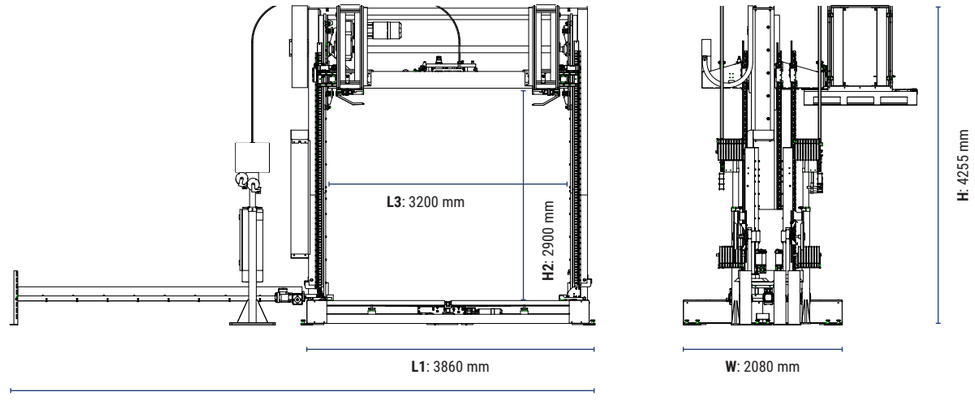

Machine model: **SPL-A-32-32/29-36**

Options

- High speed drive package
- Energy recovering system
- Service function (hinged 90°)
- Closed lower strap tracks
- Preselection pallet height
- Fully automatic strap loading system
- Fully automatic strap exchange system
- Fully automatic strap refeeding function (head)
- Pre-scanning end of strap
- Automatic safety Lock system (Duo)
- TOP edge card board applicator 750 x 250
- BOTTOM edge card board applicator 750 x 250
- Lifting and turn cross
- Turn disk
- Centering device

Ultra Sonic Sealing Technology

Strapping head SONIC PLUS	
Strap/coil options	Polyester or Polypropylene ID 406mm x W 150mm
Strap width	9 & 12 mm
Strap thickness	0,5 – 0,8 mm
Sealing	Ultra Sonic Sealing
Weight	20 kg

NEW GENERATION
HIGH PERFORMANCE
VERY COMPACT
EASY HANDLING